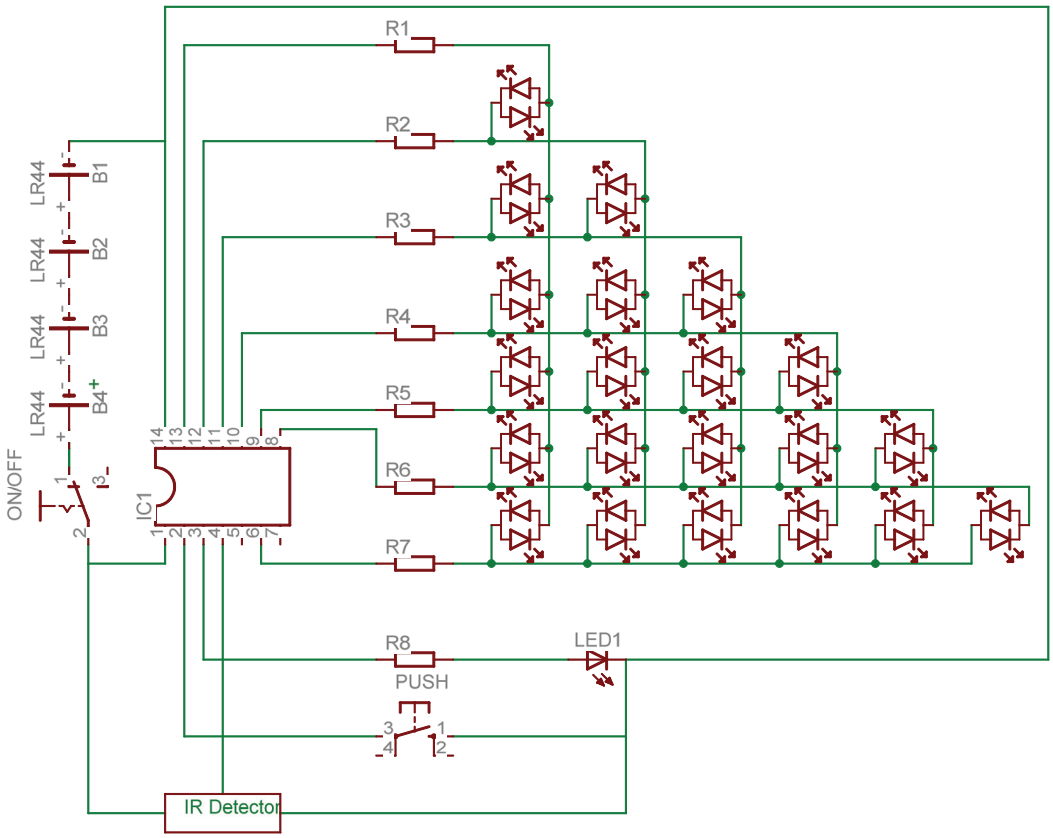
R1
R2
R3
R4
R5
R6
R7
R8
LED1
PUSH
IC1
ON/OFF
LR44
B1
B2
B3
B4
IR Detector