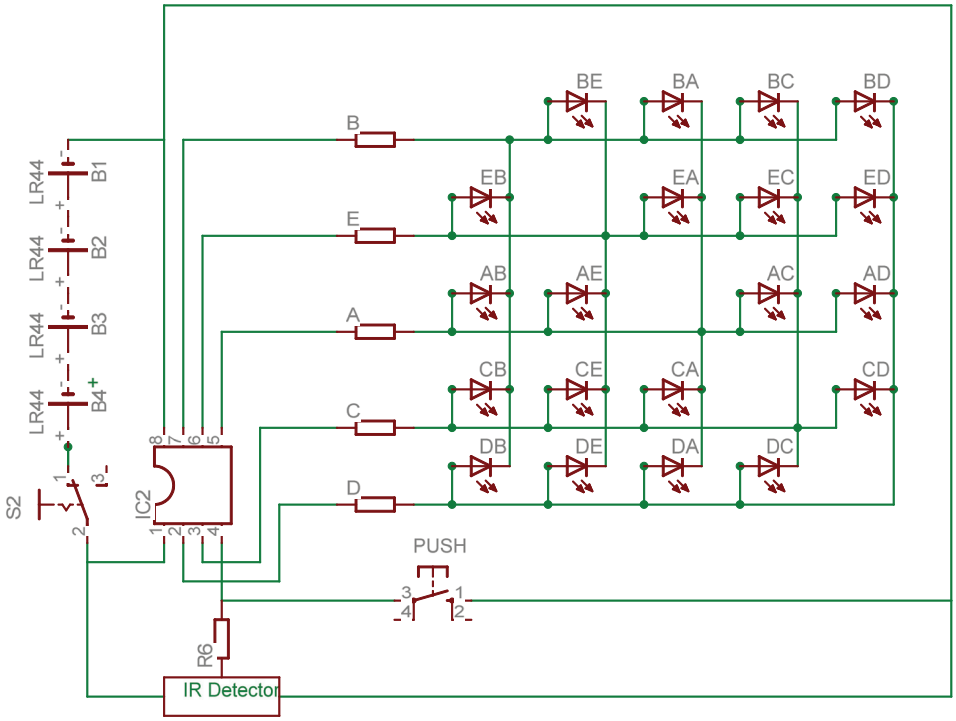
LR44
B1
LR44
B2
LR44
B3
LR44
B4
S2
IC2
B
E
A
C
D
BE
BA
BC
BD
EB
EA
EC
ED
AB
AE
AC
AD
CB
CE
CA
CD
DB
DE
DA
DC
PUSH
R6
IR Detector