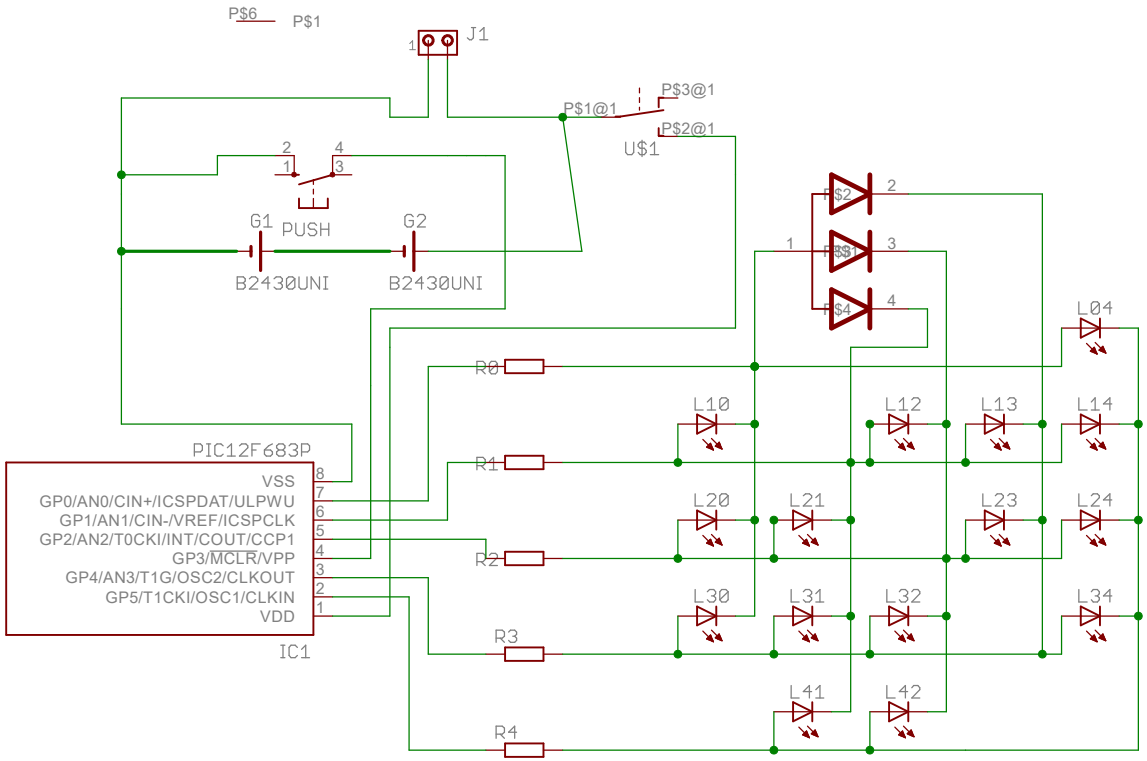
P$6
P$1
J1
1
P$1@1
P$3@1
P$2@1
U$1
2
4
1
3
PUSH
G1
G2
B2430UNI
B2430UNI
P$2
P$1
P$4
2
3
4
1
L04
R0
L10
L12
L13
L14
PIC12F683P
R1
VSS
GP0/AN0/CIN+/ICSPDAT/ULPWU
GP1/AN1/CIN-/VREF/ICSPCLK
GP2/AN2/T0CKI/INT/COUT/CCP1
GP3/MCLR/VPP
GP4/AN3/T1G/OSC2/CLKOUT
GP5/T1CKI/OSC1/CLKIN
VDD
8
7
6
5
4
3
2
1
L20
L21
L23
L24
R2
L30
L31
L32
L34
R3
L41
L42
R4
IC1