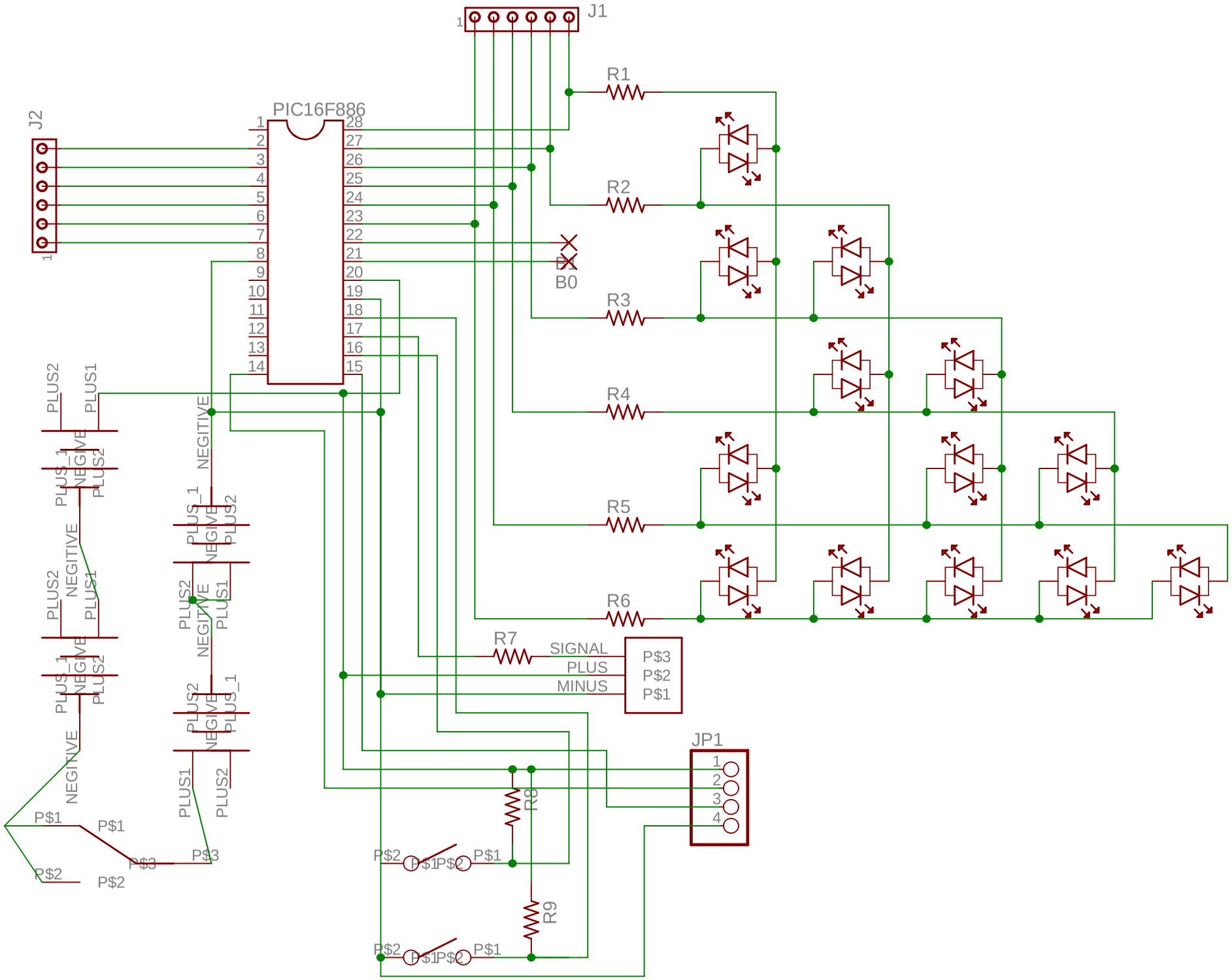
J1
J2
PIC16F886
R1
R2
R3
R4
R5
R6
R7
R9
B0
SIGNAL
PLUS
MINUS
P$3
P$2
P$1
JP1
PLUS2
PLUS1
PLUS_1
NEGITIVE