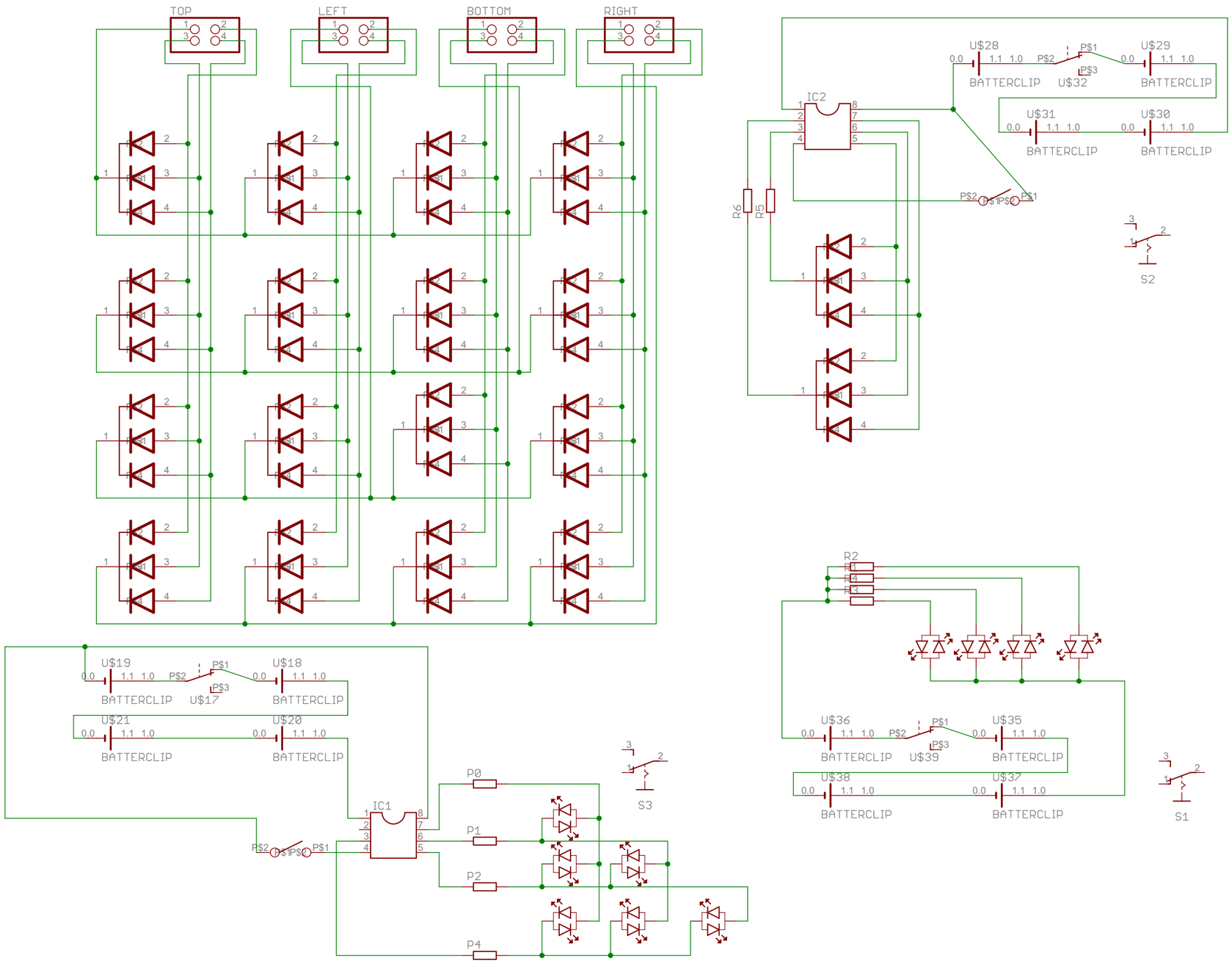
TOP
LEFT
BOTTOM
RIGHT
IC2
R6
R5
U$28
U$29
U$31
U$30
U$32
BATTERCLIP
P$1
P$2
P$3
S2
R2
U$36
U$35
U$39
U$38
U$37
S1
U$19
U$18
U$17
U$21
U$20
IC1
P0
P1
P2
P4
S3